Lavi Industries

How To Install My Closet Rod

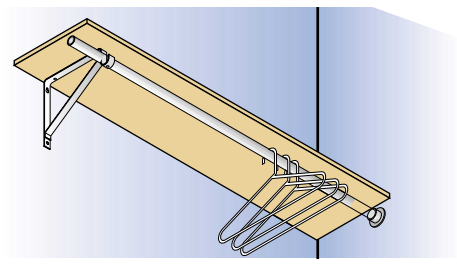

Do It Yourself Level

Easy | Moderate | Complex

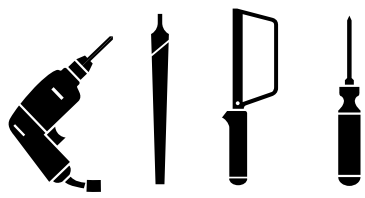

Necessary Tools

- Electric Drill/Electric Screwdriver
- Hack Saw/Cut Off Saw
- Phillips Screwdriver
- File
- Level

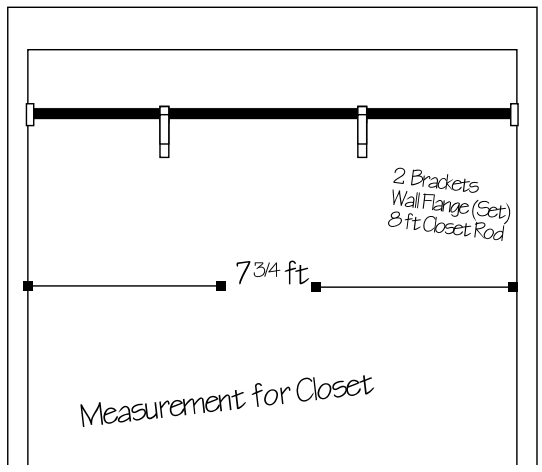

Plan

- Measure the area where you will be installing your closet rod.
- Make a simple sketch of your closet rod. The materials needed include tubing, Closet Rod/Shelf Brackets and Closet Flange Sets.
- Determine the length of the tubing. LIDO Closet Rods come in various lengths, we recommend the longer lengths to be cut as opposed to splicing shorter length tubes together.
- Create a detailed part list consisting of all parts and quantities required. Most installations will require 2 Closet Rod/Shelf Brackets and 1 Closet Flange Set per rod. (In many cases only flanges and a rod will be use to create a closet rod without a shelf. We recommend spacing the brackets 36" to 48" apart.
- **Place your order!** (Our Closet Flanges Sets include mounting screws for typical installations. Shelf Brackets will require mounting hardware to fit your specific need.)

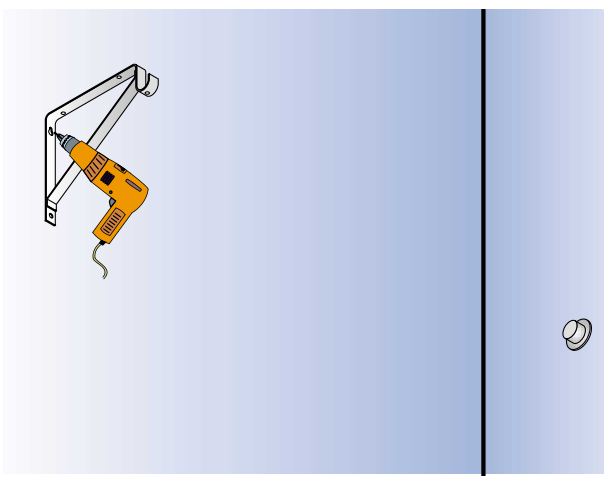

Preparation

- Mark the tube for the appropriate length for cutting. Double-check all measurements before cutting. See How To Cut Tubing Instructions.
- Please note that LIDO tubing comes wrapped in a layer of plastic film that should be left in place as long as possible during the installation process to protect the finish of the metal.
- Mark the location of your brackets and flanges with a pencil. The use of a level will allow your Closet Rod to be level after installation. The flanges and bracket rod saddles must line up for proper support of the rod.

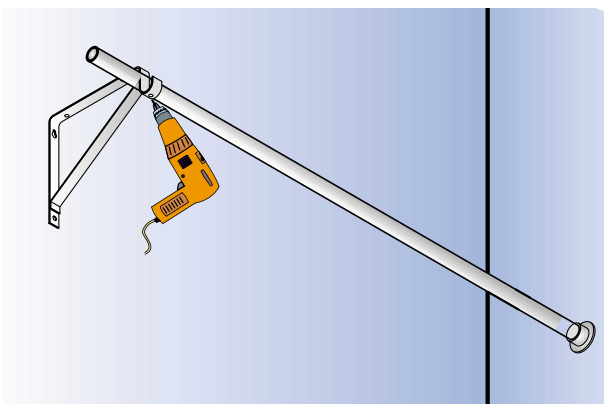

Installation

- Install the flanges on the opposing sides of the closet. Please note: 1 flange is open to allow for the placement of the rod after installation of flanges.
- Install the brackets securely to the wall. Verify again that brackets saddles are aligned with flanges.
- Install shelf on top of brackets.
- Insert rod into flanges and brackets.

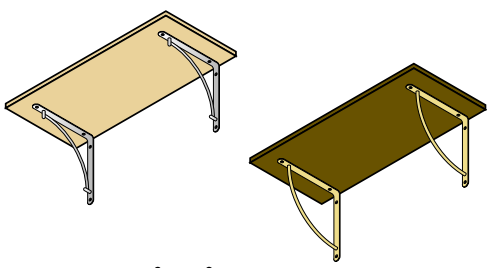
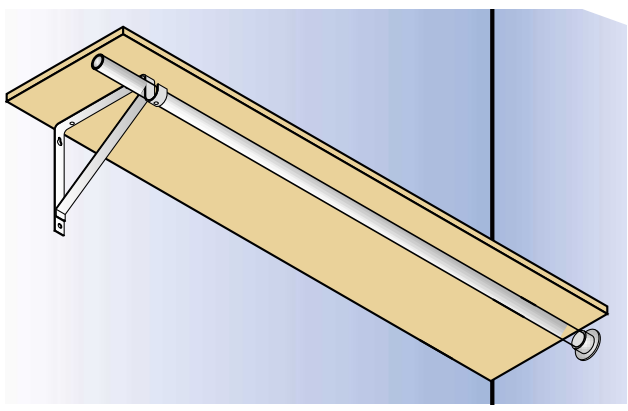
Variations
Shelf Brackets
8152 / 8154